BENCHMARK

VCE Chemistry Assessments

Student name _____

Chemistry

Question and Answer Book

Benchmark Open SAC 3.2: Electrolysis in industry

- Writing time is **55 minutes**

Approved materials
- One scientific calculator

Materials supplied
- Question and Answer Book of 12 pages
- Data Book

Instructions
- Answer all questions in the spaces provided.
- Write using blue or black pen.

Students are **not** permitted to bring mobile phones or other electronic devices into the room.

Contents pages

Questions (4 questions, 40 marks) _____ 2–9

© Benchmark 2027

Questions

Instructions

- Answer **all** questions in the spaces provided.
- Write your responses in English.
- Give simplified answers to all numerical questions, with an appropriate number of significant figures; unsimplified answers will not be given full marks.
- Show all working in your answers to numerical questions; no marks will be given for an incorrect answer unless it is accompanied by details of the working.
- Ensure that chemical equations are balanced and that the formulas for individual substances include an indication of state, for example, $H_2(g)$, NaCl(s).
- Unless otherwise indicated, the diagrams in this book are **not** drawn to scale.

Question 1 (11 marks)

Chlorine gas and sodium hydroxide are manufactured simultaneously by the electrolysis of brine, a concentrated sodium chloride solution. Both products are essential industrial chemicals, used in manufacturing plastics, paper and water treatment products. Production requires considerable electrical energy, so the operating current and efficiency of every cell are important to the company. Most modern production plants operate membrane cells, similar to the cell represented below.

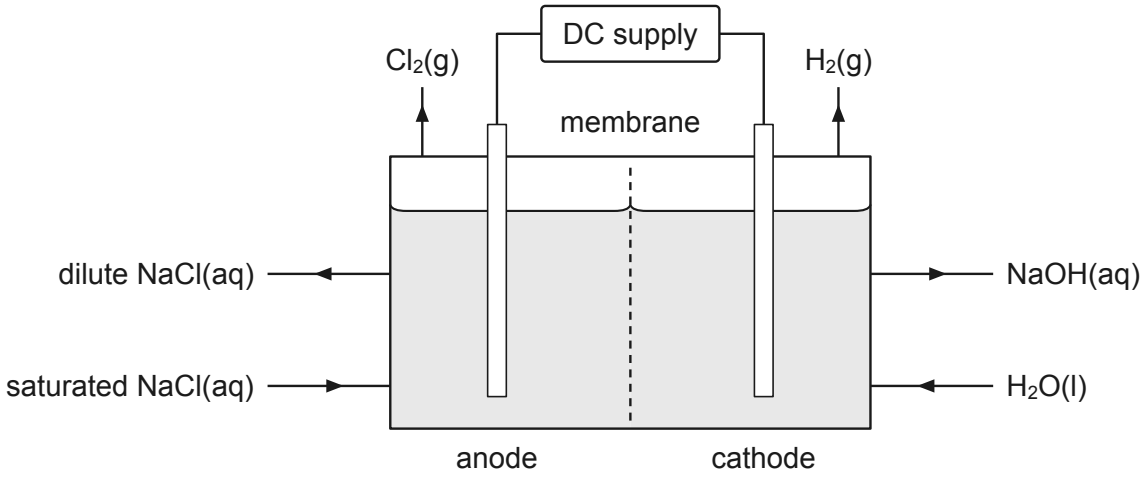

Brine enters the anode section of the cell and water enters the cathode section. The membrane allows sodium ions to pass through it, but does not allow chloride ions or hydroxide ions to pass.

Two reactions compete at the anode: the oxidation of chloride ions and the oxidation of water.

a. Write the half-equation for the main reaction at the anode. 1 mark

b. Explain why the electrochemical series would predict a different anode product, and why this prediction does not apply under these conditions. 2 marks

c. Write the half-equation for the reaction at the cathode. 1 mark

d. Explain why sodium metal is not produced in this cell. 2 marks

e. Explain how the membrane allows pure sodium hydroxide solution to be collected from the cathode side of the cell. 2 marks

f. One membrane cell operates with a constant current of 14.5 kA for 24.0 h. Calculate the mass, in kg, of chlorine gas produced. 3 marks

Question 2 (10 marks)

Aluminium is produced by the electrolysis of aluminium oxide (alumina). The alumina is dissolved in molten cryolite, Na_3AlF_6, at about 960 °C. The metal is essential to the transport and construction industries. Each cell operates day and night for several years before replacement. One cell is represented below.

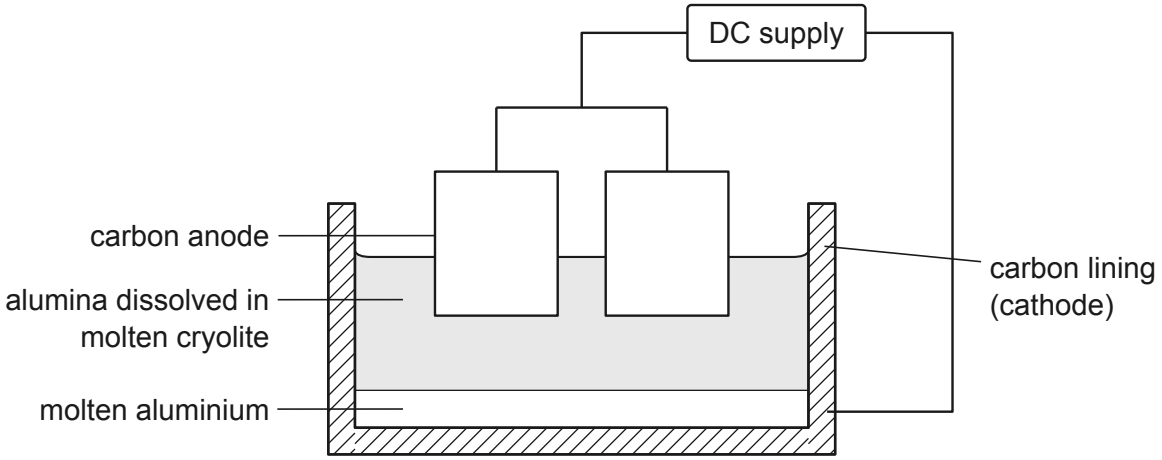

The melting point of pure alumina is 2072 °C. The aluminium produced forms a layer at the bottom of the cell. The carbon anodes are gradually used up and require replacement every few weeks.

a. Explain why aluminium cannot be produced by the electrolysis of an aqueous solution of an aluminium salt. 2 marks

b. Explain why the alumina is dissolved in molten cryolite instead of being electrolysed on its own. 2 marks

c. Write the half-equation for the reaction at the cathode. 1 mark

d. Explain why the carbon anodes are gradually used up. 2 marks

e. A cell operates with a constant current of 285 kA for 24.0 h. Only 94.5% of the charge passed produces aluminium. Calculate the mass, in kg, of aluminium produced. 3 marks

Question 3 (11 marks)

Hydrogen gas made by electrolysis using renewable energy, such as solar or wind energy, is described as ‘green’. A company plans to build a plant next to a large solar farm. The plant will operate during the day, when the solar panels generate electricity. In each cell, water is separated into hydrogen gas and oxygen gas under acidic conditions. This type of cell is called a PEM cell.

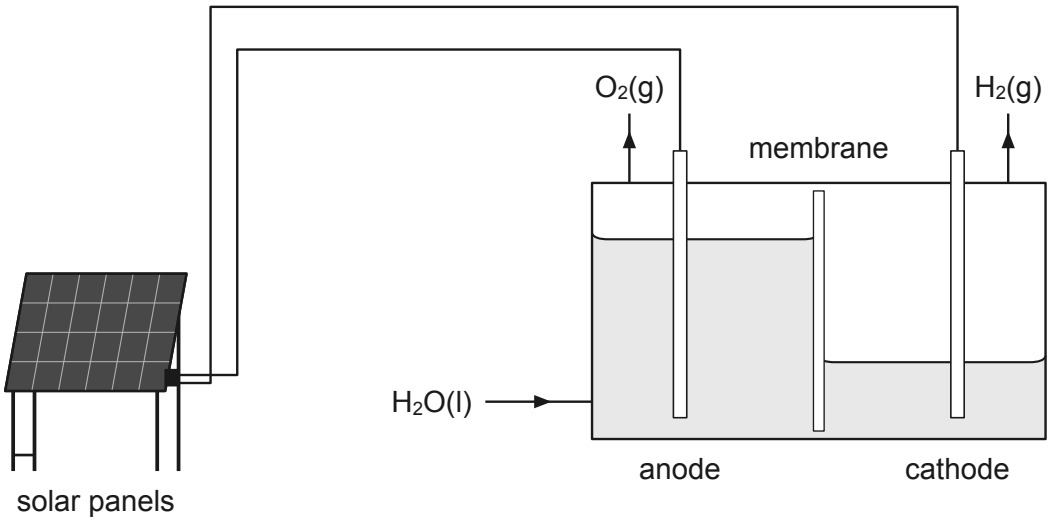

Water enters the anode section of the cell. A thin membrane, which allows only hydrogen ions to pass through, separates the two electrodes. Each electrode carries a different catalyst: iridium oxide at the anode and platinum at the cathode.

a. Write the half-equation for the reaction at the anode. 1 mark

b. Explain the role of the membrane in the operation of the cell. 2 marks

c. Explain, with reference to activation energy, how the catalyst on the anode increases the rate of production of oxygen gas. 2 marks

d. On a sunny day one cell operates with a constant current of 1.85 kA. Calculate the time, in hours, needed to produce 5.00×10^3 L of hydrogen gas, measured at SLC. 3 marks

e. The cell in Question 1 also produces hydrogen gas. The manager of a plant that uses this cell says: “The hydrogen gas from our plant is green.” Evaluate this claim. 3 marks

Question 4 (8 marks)

A remote community generates its electricity using solar panels. During the day the panels generate more electricity than the community requires, so the additional electrical energy is stored in a zinc–bromine flow battery. Overnight the battery supplies electricity to the community. The engineers who designed the system expect the battery to operate reliably for many years. The battery is represented below.

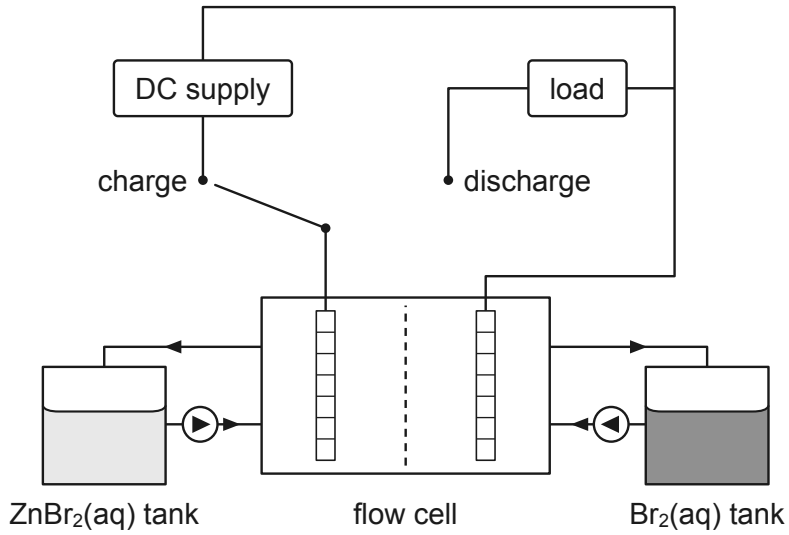

Each tank holds zinc bromide solution, which is pumped through the cell. During discharge, zinc is oxidised at one electrode and bromine is reduced at the other. The switch connects the cell either to the DC supply or to the load.

During recharging, zinc metal is deposited on one electrode. The bromine formed at the other electrode is held in the right-hand tank.

a. Write the overall equation for the reaction that occurs during recharging. 1 mark

b. State the polarity of the electrode on which zinc is deposited during recharging. 1 mark

c. Compare the operation of the battery during discharge with its operation during recharging. In your answer, refer to galvanic and electrolytic cells. 2 marks

d. Explain one design feature of the flow battery that allows it to be recharged many times. 2 marks

e. The measured voltage of one cell of the battery is 1.67 V. Explain why this differs from the voltage predicted using the electrochemical series. 2 marks

End of questions

Additional writing space

Additional writing space

© Benchmark 2027