BENCHMARK

VCE Chemistry Assessments

Chemistry

Solutions

Benchmark Open SAC 3.2: Electrolysis in industry

- Writing time is **55 minutes**

Approved materials

- One scientific calculator

Materials supplied

- Data Book

Instructions

- Answer all questions in the spaces provided.
- Write using blue or black pen.

Students are **not** permitted to bring mobile phones or other electronic devices into the room.

Contents pages

Questions (4 questions, 40 marks) 2–9

© Benchmark 2027

Questions

Instructions

- Answer **all** questions in the spaces provided.
- Write your responses in English.
- Give simplified answers to all numerical questions, with an appropriate number of significant figures; unsimplified answers will not be given full marks.
- Show all working in your answers to numerical questions; no marks will be given for an incorrect answer unless it is accompanied by details of the working.
- Ensure that chemical equations are balanced and that the formulas for individual substances include an indication of state, for example, $H_2(g)$, NaCl(s).
- Unless otherwise indicated, the diagrams in this book are **not** drawn to scale.

Question 1 (11 marks)

Chlorine gas and sodium hydroxide are manufactured simultaneously by the electrolysis of brine, a concentrated sodium chloride solution. Both products are essential industrial chemicals, used in manufacturing plastics, paper and water treatment products. Production requires considerable electrical energy, so the operating current and efficiency of every cell are important to the company. Most modern production plants operate membrane cells, similar to the cell represented below.

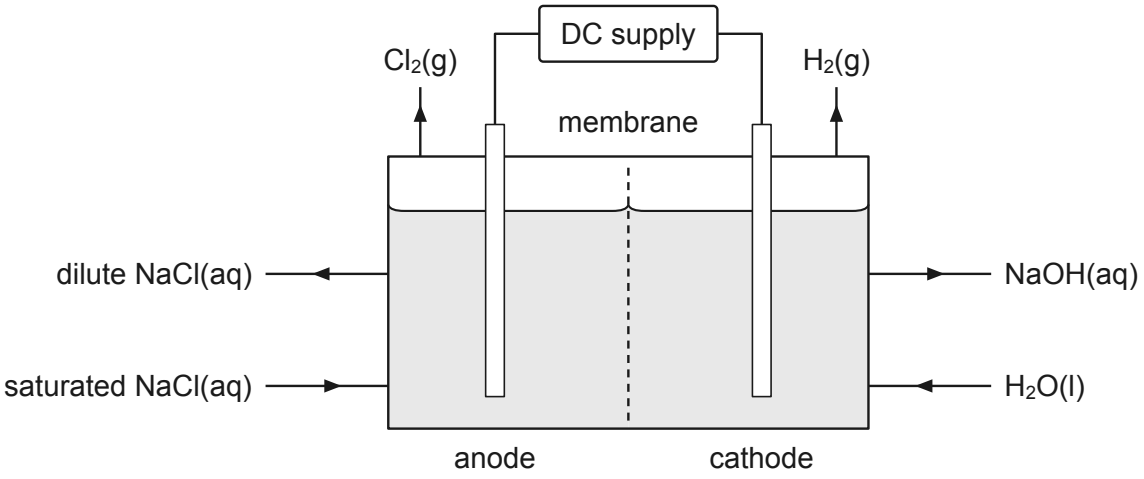

Brine enters the anode section of the cell and water enters the cathode section. The membrane allows sodium ions to pass through it, but does not allow chloride ions or hydroxide ions to pass.

Two reactions compete at the anode: the oxidation of chloride ions and the oxidation of water.

a. Write the half-equation for the main reaction at the anode. 1 mark

① $2Cl^-(aq) \rightarrow Cl_2(g) + 2e^-$

b. Explain why the electrochemical series would predict a different anode product, and why this prediction does not apply under these conditions. 2 marks

① The electrochemical series places water (forming O_2) as a stronger reductant than Cl^-, so it predicts oxygen gas at the anode.

② The series applies to standard conditions (1 mol L^{-1}, 25 °C); the chloride concentration here is far higher, so the prediction does not hold.

c. Write the half-equation for the reaction at the cathode. 1 mark

① $2H_2O(l) + 2e^- \rightarrow H_2(g) + 2OH^-(aq)$

d. Explain why sodium metal is not produced in this cell. 2 marks

① Water is a stronger oxidant than Na^+ (it is higher in the electrochemical series).

② So water is reduced in preference to Na^+, and no sodium forms (any sodium would also react with the water).

e. Explain how the membrane allows pure sodium hydroxide solution to be collected from the cathode side of the cell. 2 marks

① Na^+ ions pass through the membrane into the cathode side, balancing the charge of the OH^- ions formed there.

② Cl^- ions cannot pass, and OH^- ions cannot reach the chlorine, so the NaOH(aq) is not contaminated with chloride or with products of OH^- reacting with Cl_2.

f. One membrane cell operates with a constant current of 14.5 kA for 24.0 h. Calculate the mass, in kg, of chlorine gas produced. 3 marks

① $Q = I \times t = 14.5 \times 10^3 \times 24.0 \times 60 \times 60 = 1.2528 \times 10^9$ C

② $n(e^-) = \frac{Q}{F} = \frac{1.2528 \times 10^9}{96\,500} = 12982.3\ldots$ mol; $n(Cl_2) = \frac{n(e^-)}{2} = 6491.19\ldots$ mol

③ $m(Cl_2) = n \times M = 6491.19\ldots \times 71.0 = 4.60874\ldots \times 10^5$ g = 461 kg (to 3 s.f.)

Question 2 (10 marks)

Aluminium is produced by the electrolysis of aluminium oxide (alumina). The alumina is dissolved in molten cryolite, Na_3AlF_6, at about 960 °C. The metal is essential to the transport and construction industries. Each cell operates day and night for several years before replacement. One cell is represented below.

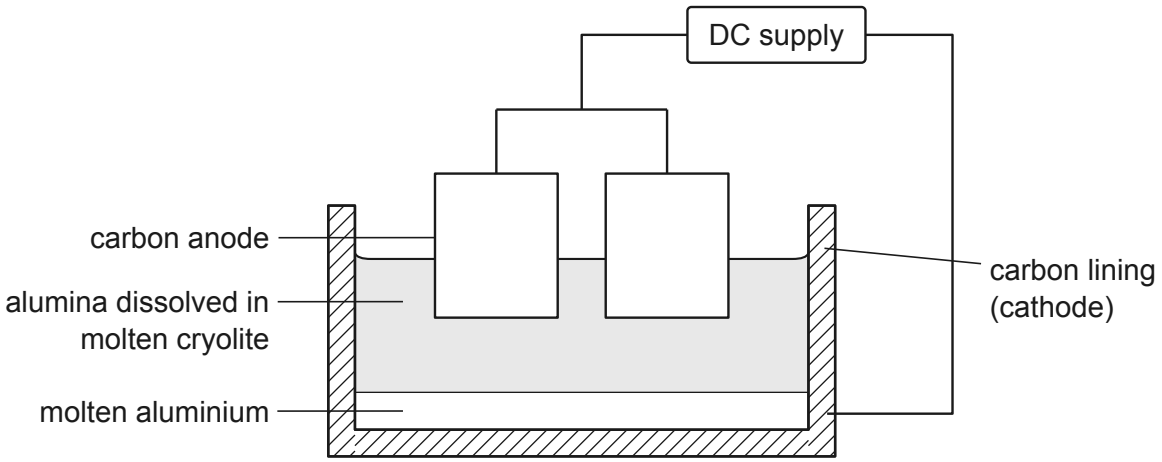

The melting point of pure alumina is 2072 °C. The aluminium produced forms a layer at the bottom of the cell. The carbon anodes are gradually used up and require replacement every few weeks.

a. Explain why aluminium cannot be produced by the electrolysis of an aqueous solution of an aluminium salt. 2 marks

① Water is a stronger oxidant than Al^{3+} ions.

② So water would be reduced at the cathode, producing hydrogen gas instead of aluminium.

b. Explain why the alumina is dissolved in molten cryolite instead of being electrolysed on its own. 2 marks

① Cryolite lowers the operating temperature of the molten electrolyte to about 960 °C, far below the 2072 °C needed to melt pure alumina.

② Much less energy is therefore needed to keep each cell molten, which lowers the electricity cost of production.

c. Write the half-equation for the reaction at the cathode. 1 mark

① $Al^{3+}(l) + 3e^- \rightarrow Al(l)$

d. Explain why the carbon anodes are gradually used up. 2 marks

① Oxide ions are oxidised at the anode to form oxygen gas.

② At about 960 °C this oxygen gas reacts with the carbon of the anode to form carbon dioxide gas, so the anode is consumed.

e. A cell operates with a constant current of 285 kA for 24.0 h. Only 94.5% of the charge passed produces aluminium. Calculate the mass, in kg, of aluminium produced. 3 marks

① $Q(\text{producing Al}) = I \times t \times \frac{94.5}{100} = 285 \times 10^3 \times 24.0 \times 60 \times 60 \times 0.945 = 2.326968 \times 10^{10}$ C

② $n(e^-) = \frac{Q}{F} = \frac{2.326968 \times 10^{10}}{96\,500} = 241136.5\ldots$ mol; $n(\text{Al}) = \frac{n(e^-)}{3} = 80378.86\ldots$ mol

③ $m(\text{Al}) = n \times M = 80378.86\ldots \times 27.0 = 2.17022\ldots \times 10^6$ g $= 2.17 \times 10^3$ kg (to 3 s.f.)

Question 3 (11 marks)

Hydrogen gas made by electrolysis using renewable energy, such as solar or wind energy, is described as 'green'. A company plans to build a plant next to a large solar farm. The plant will operate during the day, when the solar panels generate electricity. In each cell, water is separated into hydrogen gas and oxygen gas under acidic conditions. This type of cell is called a PEM cell.

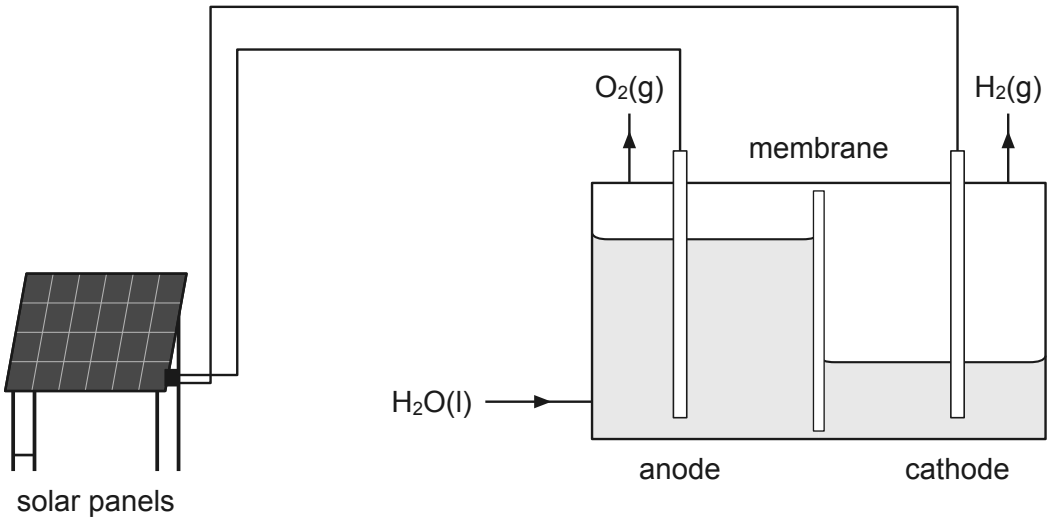

Water enters the anode section of the cell. A thin membrane, which allows only hydrogen ions to pass through, separates the two electrodes. Each electrode carries a different catalyst: iridium oxide at the anode and platinum at the cathode.

a. Write the half-equation for the reaction at the anode. 1 mark

① $2H_2O(l) \rightarrow O_2(g) + 4H^+(aq) + 4e^-$

b. Explain the role of the membrane in the operation of the cell. 2 marks

① H^+ ions formed at the anode move through the membrane to the cathode, where they are reduced to hydrogen gas, so the circuit is complete.

② The membrane keeps the hydrogen gas and oxygen gas apart, so they do not mix and form an explosive mixture.

c. Explain, with reference to activation energy, how the catalyst on the anode increases the rate of production of oxygen gas. 2 marks

① The catalyst provides an alternative reaction pathway with a lower activation energy.

② A greater proportion of collisions then have energy equal to or greater than the activation energy, so there are more successful collisions per second.

d. On a sunny day one cell operates with a constant current of 1.85 kA. Calculate the time, in hours, needed to produce 5.00×10^3 L of hydrogen gas, measured at SLC. 3 marks

① $n(H_2) = \frac{V}{V_m} = \frac{5.00 \times 10^3}{24.8} = 201.612\ldots$ mol; $n(e^-) = 2 \times n(H_2) = 403.225\ldots$ mol

② $Q = n(e^-) \times F = 403.225\ldots \times 96\,500 = 3.89112\ldots \times 10^7$ C

③ $t = \frac{Q}{I} = \frac{3.89112\ldots \times 10^7}{1.85 \times 10^3} = 21\,033.1\ldots$ s $= \frac{21\,033.1\ldots}{3600} = 5.84$ h (to 3 s.f.)

e. The cell in Question 1 also produces hydrogen gas. The manager of a plant that uses this cell says: "The hydrogen gas from our plant is green." Evaluate this claim. 3 marks

① Hydrogen gas is green when it is made by electrolysis powered by renewable energy, so that no carbon dioxide is released in making it.

② In the membrane cell, hydrogen gas is a by-product of making chlorine and sodium hydroxide, formed by reducing water at the cathode, so it could be green.

③ Judgement: the claim cannot be accepted without knowing the plant's electricity source. It is valid only if that electricity is renewable, such as solar or wind; if it comes from power stations that combust fossil fuels, the hydrogen gas is not green.

Question 4 (8 marks)

A remote community generates its electricity using solar panels. During the day the panels generate more electricity than the community requires, so the additional electrical energy is stored in a zinc–bromine flow battery. Overnight the battery supplies electricity to the community. The engineers who designed the system expect the battery to operate reliably for many years. The battery is represented below.

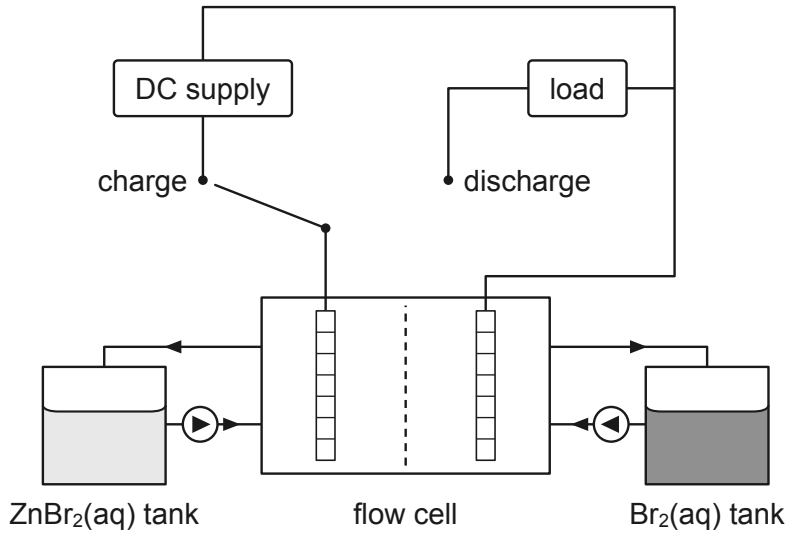

Each tank holds zinc bromide solution, which is pumped through the cell. During discharge, zinc is oxidised at one electrode and bromine is reduced at the other. The switch connects the cell either to the DC supply or to the load.

During recharging, zinc metal is deposited on one electrode. The bromine formed at the other electrode is held in the right-hand tank.

a. Write the overall equation for the reaction that occurs during recharging. 1 mark

① $Zn^{2+}(aq) + 2Br^{-}(aq) \rightarrow Zn(s) + Br_2(aq)$

b. State the polarity of the electrode on which zinc is deposited during recharging. 1 mark

① negative

c. Compare the operation of the battery during discharge with its operation during recharging. In your answer, refer to galvanic and electrolytic cells. 2 marks

① During discharge the battery is a galvanic cell: a spontaneous redox reaction converts chemical energy into electrical energy.

② During recharging it is an electrolytic cell: the DC supply forces the non-spontaneous reverse reaction, converting electrical energy into chemical energy.

d. Explain one design feature of the flow battery that allows it to be recharged many times. 2 marks

① The products of discharge, Zn^{2+} and Br^- ions, stay dissolved in the electrolyte, and the zinc and bromine formed on recharging are stored in the cell and tank.

② Because no product escapes, the reactants are available and in contact with the electrodes, so the reaction can be reversed repeatedly.

e. The measured voltage of one cell of the battery is 1.67 V. Explain why this differs from the voltage predicted using the electrochemical series. 2 marks

① Predicted voltage = $E^0(Br_2/Br^-) – E^0(Zn^{2+}/Zn) = 1.08 – (–0.76) = 1.84$ V

② The predicted value applies only at standard conditions (1 mol L^{-1}, 25 °C) with no current drawn. In the operating battery the concentrations and temperature are not standard, and when current is drawn some voltage is lost overcoming the internal resistance of the cell, so the measured voltage differs (any one reason, explained).

End of questions

Additional writing space

Additional writing space

© Benchmark 2027